SHEET OF

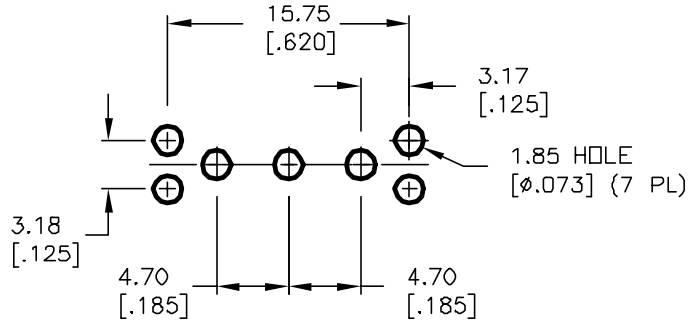

RECOMMENDED PCB LAYOUT

SCALE 2:1

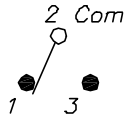

CIRCUIT: SPST

SWITCH FUNCTION		
POS. 1	POS. 2	POS. 3
ON	OFF	ON
2-3	OPEN	2-1

NOTES:

1. ALL DIMENSIONS IN MM [INCH]
2. GENERAL TOLERANCE: X.X=±0.4
   X.XX=±0.25
3. TERM. NOS. FOR REF. ONLY
4. RATING: 0.4VA @20V AC or DC max.
5. ▲ MATERIAL: FIXED TERMINAL & MOVING CONTACT
   Copper Alloy w/Gold plate over
   Nickel plate.
6. CONTACT RESISTANCE: 10mILLI Ohms max initial
   @2-4VDC, 100mA for AG & AU
7. ELECTRICAL LIFE: 50,000 make-and-break
   cycles at full load.
8. INSULATION RESISTANCE: 1,000M ohm min.
9. DIELECTRIC STRENGTH: 1000V RMS @sea level
10. OPERATING TEMP.: -30°C to 85°C

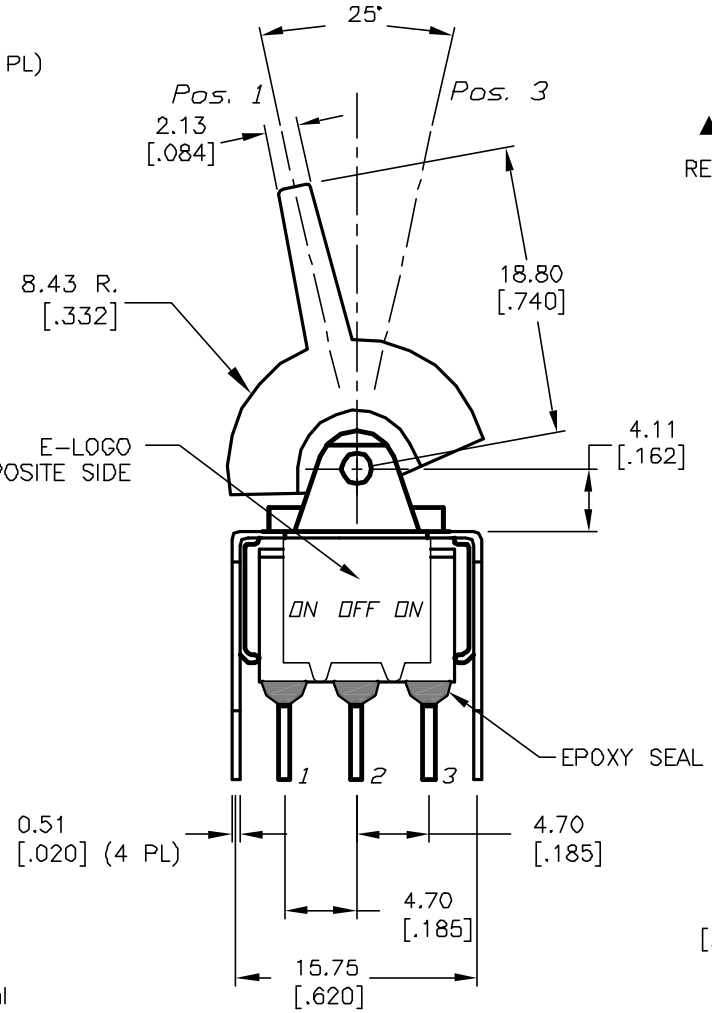

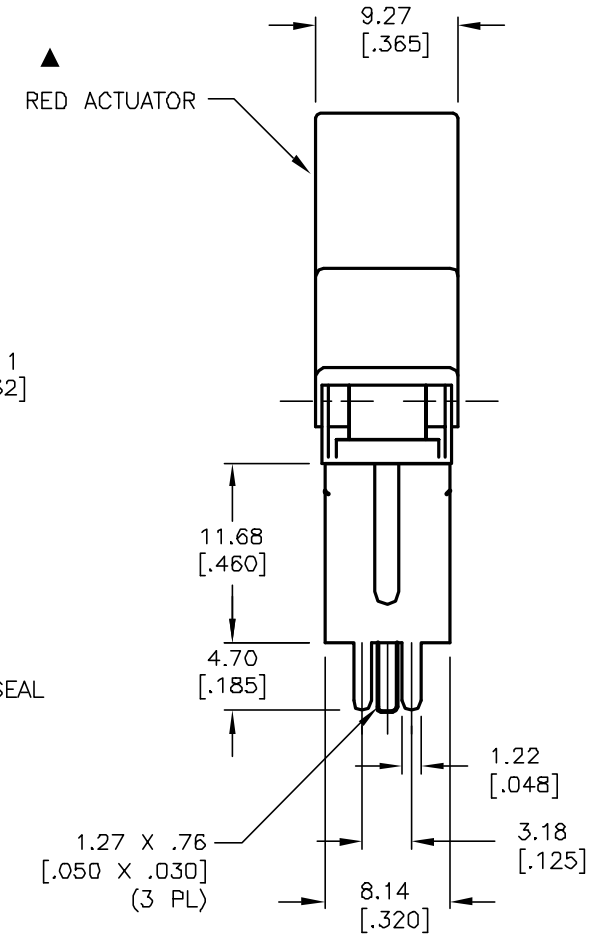

REV.	ECN No.	DESCRIPTION	DATE	CHKD
A	12171	RELEASED FOR PRODUCTION	9/26/02	CJB

THE INFORMATION CONTAINED IN THIS DOCUMENT IS PROPRIETARY TO E-SWITCH AND IS NOT TO BE COPIED OR TRANSFERRED

E-SWITCH®

TITLE 300 SP-3 (J2 RED) VS2 R E (GOLD CONTACTS)

SCALE	DATE	DR	DWG	REV
2:1	9/26/02	CJB	T313023	A